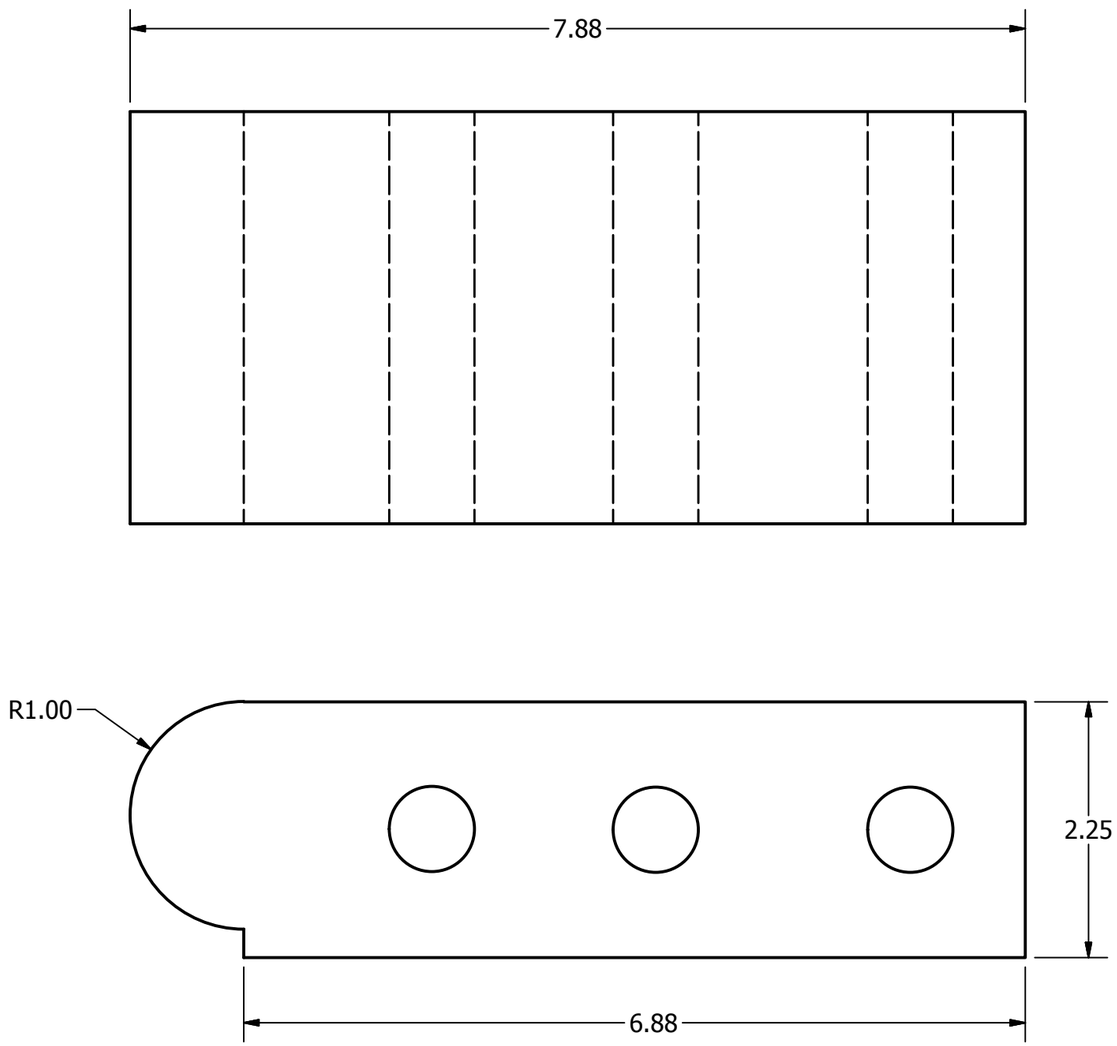

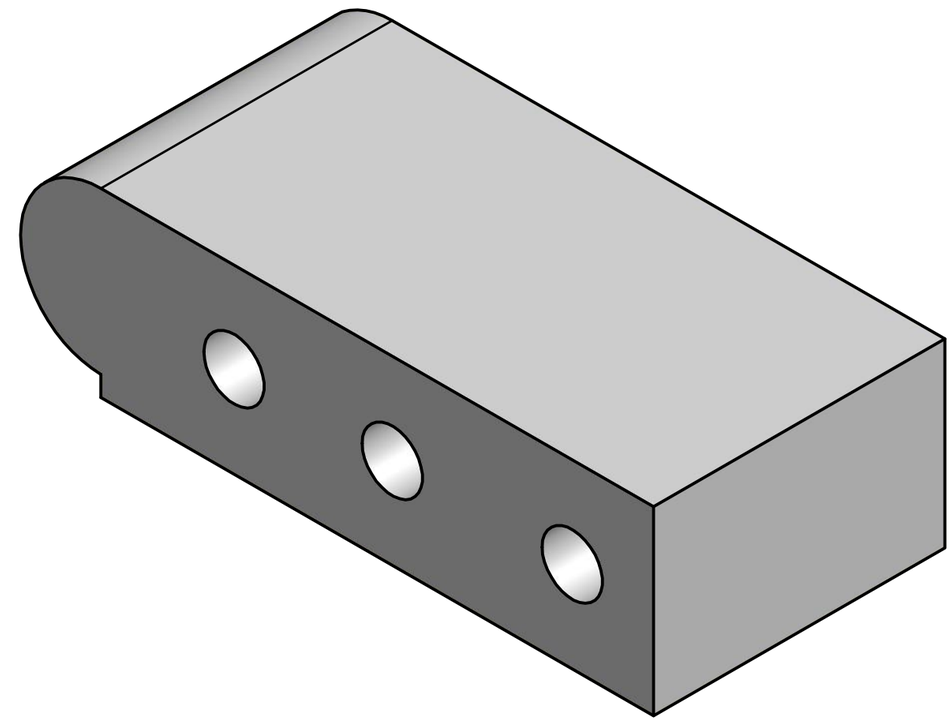

PINE HALL BRICK CO.
634 LINDSAY BRIDGE RD.
MADISON, NC 27025

TITLE

ST-1 Shape

ST-1 SHAPE PART DETAIL

SIZE	DWG NO	REV
B		

SCALE

SHEET 1 OF 1